# EN54 FireProtect (Sounder/VAD) Jeweller user manual

Updated March 23, 2026

**Revision 4**

**EN54 FireProtect (Sounder/VAD) Jeweller** is a wireless addressable fire alarm sounder combined with a visual alarm device (VAD). The device complies with EN 54 requirements and ensures alarm recognition in various environments, including noisy areas. Visual indication makes the alarm perceptible to people with hearing impairments.

EN54 FireProtect (Sounder/VAD) Jeweller operates as part of an Ajax system and communicates with control and indicating equipment (CIE) via secure Jeweller radio protocol. The communication range with the CIE is up to 1,700 m in an open space.

**Buy EN54 FireProtect (Sounder/VAD) Jeweller**

## Functional elements

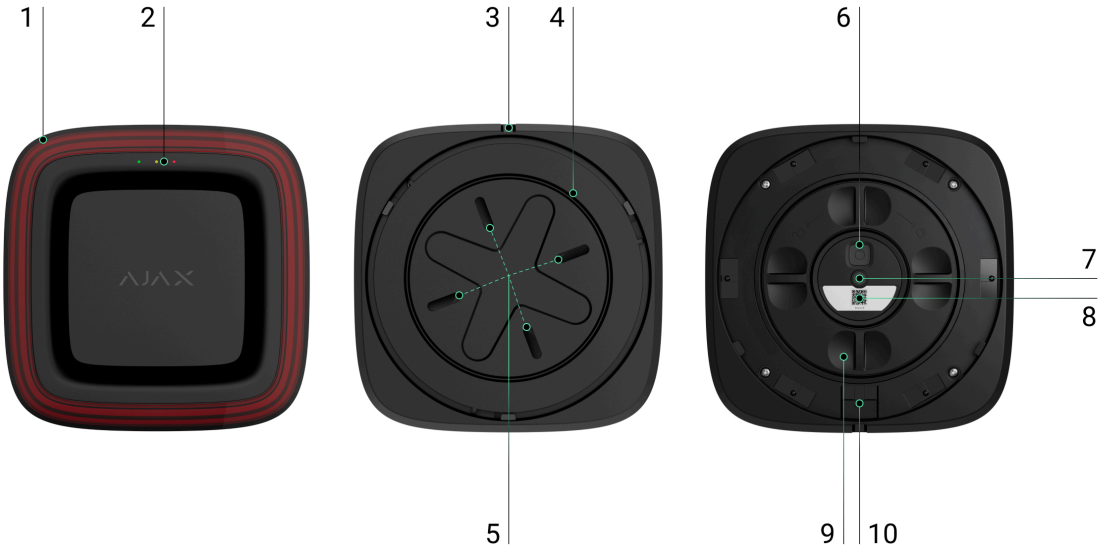


1. LED frame.
2. LED indicators: green, yellow, and red.
3. Hole for a special tool needed to unlock the lock.
4. SmartBracket mounting panel. To remove the panel, insert the special tool into the corresponding hole and turn SmartBracket counterclockwise. If the device is unlocked, simply turn SmartBracket counterclockwise.
5. Fixing points to attach SmartBracket to the surface.
6. Power button.
7. **Tamper button**. It triggers in case of an attempt to remove the device from the mounting panel.
8. QR code with the device ID. It is used to add the device to the CIE.
9. Battery compartment cover. To replace the batteries, turn the cover counterclockwise.
10. Lock to secure the device on SmartBracket (optionally).

## Compatible CIEs and range extenders

EN54 FireProtect (Sounder/VAD) Jeweller requires the Ajax CIE with an up-to-date **OS Malevich** version.

Check device compatibility

## Operating principle

**EN54 FireProtect (Sounder/VAD) Jeweller** is a wireless fire alarm device that activates both audible and visual alerts when a fire is detected.

- The **sounder** emits a high-volume alarm signal (up to 100 dB at a distance of 1 m, depending on the settings) following a temporal pattern compliant with EN 54-3.
- The device's LED frame, functioning as a **VAD**, flashes in a temporal pattern (0.5 Hz) defined by EN 54-23.

Audible and visual alerts are synchronized to ensure simultaneous activation. The device is powered by pre-installed batteries and does not require an external power supply. EN54 FireProtect (Sounder/VAD) Jeweller monitors its operational state and informs the system of faults if any occur.

## Jeweller data transfer protocols

**Jeweller** is a wireless data transfer protocol that provides fast and reliable two-way communication between the CIE and devices. The device uses Jeweller to transmit commands, alarms, and events.

Learn more

## Sending events to the monitoring station

An Ajax system can transmit alarms to both the Ajax PRO Desktop app and the monitoring station in the formats of **SurGard (Contact ID), SIA (DC-09), ADEMCO 685**, and other protocols.

**The system with EN54 FireProtect (Sounder/VAD) Jeweller installed can transmit the following events:**

1. Sounder hardware fault/recovery.
2. VAD hardware fault/recovery.
3. Low battery alarm/recovery.
4. Tamper alarm/recovery.
5. Loss/recovery of communication between EN54 FireProtect (Sounder/VAD) Jeweller and the CIE.

> The system allows disabling fault indication and notifications of Jeweller connection loss for EN54 devices used in mobile environments, such as fire engines.
>
> How to disable Jeweller connection loss notifications for EN54 devices

When an alarm is received, the operator at the monitoring station knows precisely what happened and where. The addressability of Ajax devices allows sending events to Ajax PRO Desktop or the monitoring software, including the device type, its name, fire zone, virtual room, and location description. Please note that the list of transmitted parameters may vary depending on the monitoring software and the selected communication protocol for the monitoring station.

> You can find the device ID and zone number in the device states.

## Selecting the installation site

The device is intended for outdoor and indoor installation. The recommended installation height of the device is up to **3 m** on the ceiling and up to **2.4 m** on the wall. When selecting a proper location, consider the sounder's audibility and the visibility of its LED frame, as these determine the device's performance.

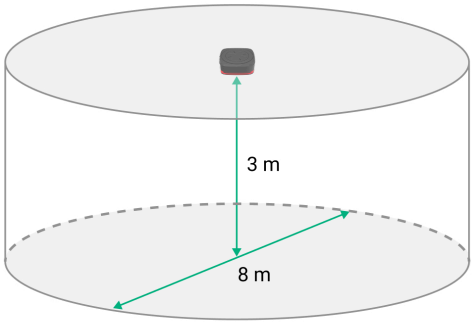


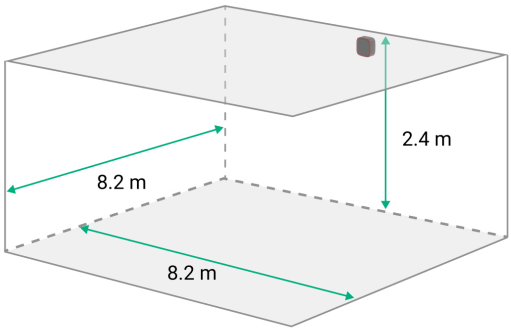


When selecting where to place EN54 FireProtect (Sounder/VAD) Jeweller, consider the parameters that affect its operation:

- Jeweller signal strength;
- the distance between the device and the CIE;
- presence of obstacles to radio signal and sound transmission, such as walls, interfloor ceilings, and large objects in the room.

Consider the placement recommendations when developing a system project. Only specialists must design and install Ajax systems. A list of recommended partners is **available here**.

## Signal strength

The signal strength is determined by the number of undelivered or corrupted data packets over a certain period of time. The icon ıll in the **Devices** tab in Ajax apps indicates the signal strength:

- **three bars** — excellent signal strength;
- **two bars** — good signal strength;
- **one bar** — low signal strength, stable operation is not guaranteed;
- **crossed-out icon** — no signal.

Note that if the signal strength is excellent, the device can automatically adjust the radio transmission power to reduce power consumption and radio interference.

> ⚠ Run the Jeweller signal strength test before final installation. The test checks the signal strength at the device's maximum transmission power. **To comply with EN 54 requirements, the signal strength between the device and the CIE must be at least two bars**.
>
> If the test shows the signal strength of one or zero bars, we do not guarantee the device will operate stably. Consider relocating it, as adjusting its position even by 20 cm or rotating it relative to the CIE can significantly improve the signal strength. If the signal remains poor or unstable after relocation, consider using a radio signal range extender.

Refer to the **Device functionality testing** section to learn how to run the Jeweller signal strength test.

**What is the Jeweller signal strength test**

## Where not to install the device

- In places where the acoustic signal may be attenuated (inside furniture, behind thick curtains, etc.).
- Near any metal objects or mirrors that cause signal attenuation and screening of the signal.
- In places where temperature and humidity levels are outside the **permissible limits**. This may damage the device.
- In places with low or unstable Jeweller signal strength. This may result in losing connection to the CIE.
- Closer than 1 m to the CIE or radio signal range extender.

## Installation

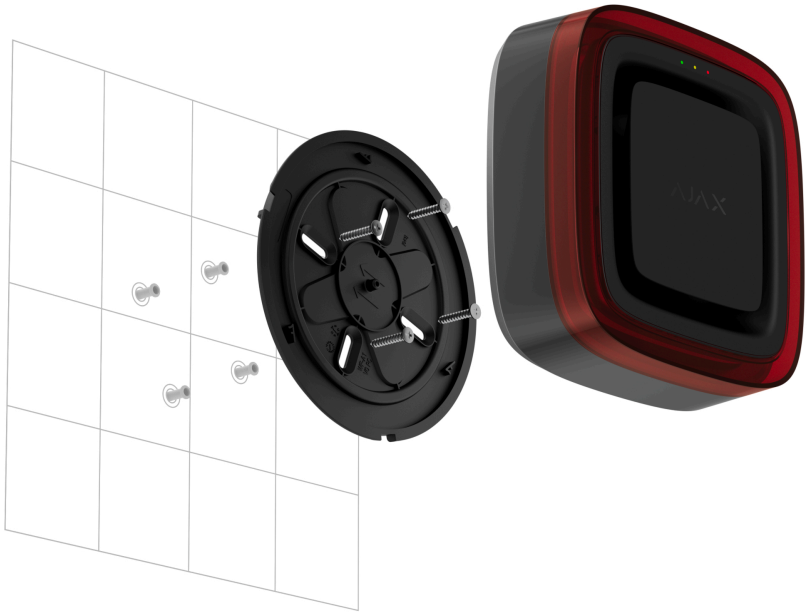

Before installing EN54 FireProtect (Sounder/VAD) Jeweller, ensure that you have selected the optimal location that complies with the requirements of this manual.

Only a professional must install this device.

**To install the device:**

1. Remove the SmartBracket mounting panel from the device. To remove the panel, turn it counterclockwise.

   Use the device only with **FP.54V.J-000-EU**, **FP.54A.J-000-EU**, or **FP.54AV.J-000-EU** SmartBracket mounting panels.

2. Secure the SmartBracket panel to a surface using double-sided adhesive tape or other temporary fasteners. The ↑↑ sign on SmartBracket is for informational purposes only. It can help you align the device properly.

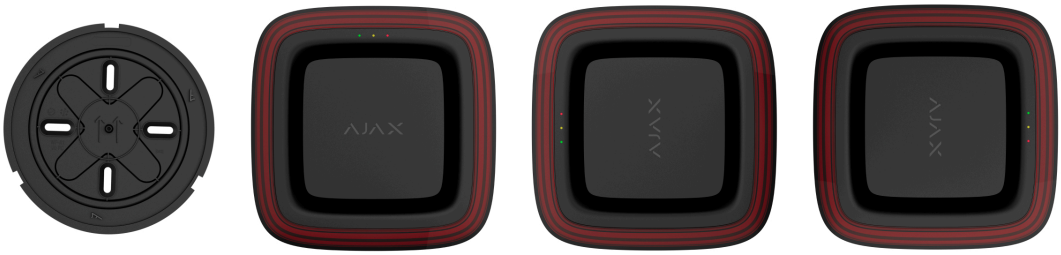

Use double-sided adhesive tape for temporary fixation only. The device secured by the adhesive tape can detach from the surface at any time, which may result in damage if it falls.

3. Add EN54 FireProtect (Sounder/VAD) Jeweller to the CIE.
4. Place the device on the SmartBracket mounting panel.
5. Run the **device functionality testing**.
6. Remove the device from the mounting panel.
7. Attach the SmartBracket panel to the surface using the bundled screws for all fixing points. When using other fasteners, make sure they do not damage or deform the mounting panel.
8. To additionally secure the device on SmartBracket with the lock, move the locking mechanism to 🔒 position. In this case, you will need to insert a special tool into the corresponding hole to remove the mounting panel.

9. Place the device on the SmartBracket mounting panel.

10. Adjust the position of the device if necessary. The SmartBracket mounting panel allows the detector to be rotated up to 90°.

## Adding to the system

> The CIE and the device must operate at the same radio frequency; otherwise, they are incompatible. The radio frequency range of the device may vary based on the region. We recommend purchasing and using Ajax devices in the same region. You can verify the range of operating radio frequencies with the technical support service.

## Before adding the module

1. Install an **Ajax app**.
2. Log in to your **account** or create a new one.
3. Select a **space** or create a new one.
4. Add at least one **virtual room**.
5. Add a **compatible CIE** to the space. Ensure the CIE is switched on and has internet access via Ethernet, Wi-Fi, and/or mobile network.
6. Check the states in the Ajax app to ensure the space is disarmed and the CIE is not starting an update.

> Only a PRO or a space admin with the rights to configure the system may add the device to the CIE.

Types of accounts and their rights

## Adding the device to the CIE

1. Open an **Ajax app**. Select a **space** to which you want to add the device.

2. Go to the **Devices** tab and select **Add device**.

3. Scan the QR code or enter the device ID manually. A QR code with the ID is placed on the device under the SmartBracket mounting panel. Also, it is duplicated on the device packaging.

4. Assign a name to the device.

5. Select a fire zone and a virtual room.

6. If necessary, specify the device location in the **Location** field.

7. Select **Add device**, and the countdown will begin.

8. Switch on the device by holding the power button for 3 seconds.

Once added to the CIE, the device will appear in the list of CIE devices in the Ajax app. The update frequency for device states in the list depends on the **Jeweller** settings and is 36 seconds by default.

If the connection fails, try again in 5 seconds. If the maximum number of devices has already been added to the CIE, you will receive an error

notification when you try to add more.

> EN54 FireProtect (Sounder/VAD) Jeweller works with only one CIE. When added to a new CIE, it stops sending events to the old one. After the device is added to a new CIE, it will not be automatically removed from the device list of the old CIE. This must be done through the Ajax app.

## Device functionality testing

An Ajax system provides several types of tests to help select the correct installation place for the devices. For EN54 FireProtect (Sounder/VAD) Jeweller, the following tests are available:

- **Jeweller signal strength test** — to determine the signal strength and stability between the CIE (or the radio signal range extender) and the device via the wireless Jeweller data transfer protocol at the device installation site.
- **Alarm annunciation test** — to check the sound and visual alerts to ensure fire alarm signals are clearly audible and visible within the premises.

To run the test:

1. Open an **Ajax app**. Select a **space** with the added device.
2. Go to the **Devices** tab.
3. Select **EN54 FireProtect (Sounder/VAD) Jeweller**
4. Go to the settings by tapping on the gear icon.
5. Select **Jeweller signal strength test** or **Alarm annunciation test**.

Also, you can run the **Alarm annunciation test** on the CIE touch screen.

## Icons

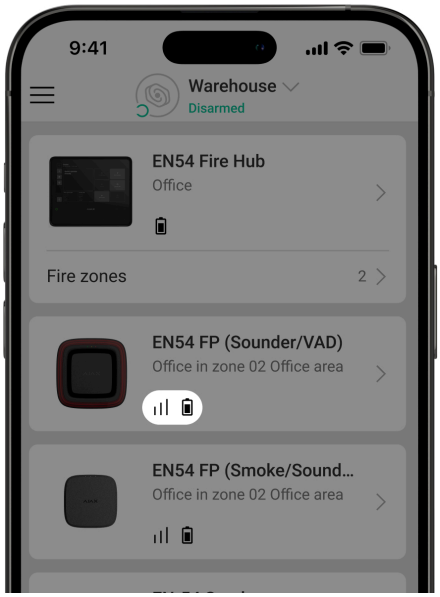


Icons in an Ajax app display some of the EN54 FireProtect (Sounder/VAD) Jeweller states. You can check the icons in the **Devices** tab.

| Icon | Meaning |
|---|---|
| | Jeweller signal strength. It displays the signal strength between the CIE or the range extender and the device. The recommended value is 3 bars.<br><br>**Learn more** |
| | Battery charge level of the device.<br><br>**Learn more** |
| RE | The device operates via the radio signal range extender.<br><br>**Learn more** |
| | The device is emitting a sound. |
| | The device is silenced. |
| | The device is flashing. |
| | The device's visual alarm is silenced. |
| | The device test is in progress. |

| | |
|---|---|
| ⚠ | EN54 FireProtect (Sounder/VAD) Jeweller has a fault. The list of faults is available in the device **states**. |
| ⊗ | EN54 FireProtect (Sounder/VAD) Jeweller is completely or partially disabled. |
| Offline | The device has lost connection to the CIE, or the CIE has lost connection to the Ajax Cloud server. |
| Not transferred | The device has not been transferred to the new CIE.<br>**Learn more** |

## States

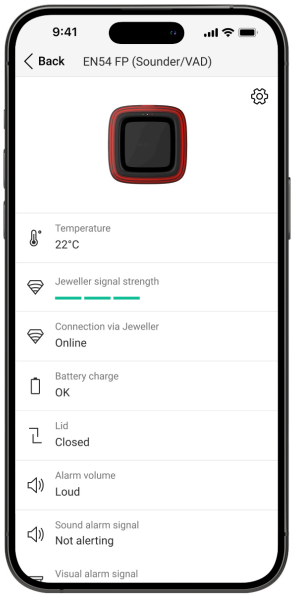


The states include information about the device and its operating parameters. You can find the states of EN54 FireProtect (Sounder/VAD) Jeweller in Ajax apps:

1. Go to the **Devices** tab.
2. Select **EN54 FireProtect (Sounder/VAD) Jeweller** from the list.

| Parameter | Meaning |
| --- | --- |
| Data import | Displays the error when the data is being transferred to the new CIE:<br><br>• **Failed** — the device has not been transferred to the new CIE.<br><br>Learn more |
| Fault | The device has a fault.<br><br>Tapping on ⓘ opens the list of EN54 FireProtect (Sounder/VAD) Jeweller faults.<br><br>The field is displayed only if a fault is detected. |
| Fully disabled / Partially disabled | The device or some of its functions are disabled. It does not respond to the alarm and does not notify users and the monitoring station. Tapping on ⓘ opens a list of disabled device functions.<br><br>The field is displayed only if the device is completely or partially disabled. |
| Temperature | The device temperature. It is measured by EN54 FireProtect (Sounder/VAD) Jeweller and changes depending on the ambient temperature. |
| Jeweller signal strength | Jeweller signal strength between the device and the CIE (or the radio signal range extender). The recommended value is 2–3 bars.<br><br>Jeweller is a protocol for transmitting commands, events, and alarms. |
| Connection via Jeweller | The connection state via the Jeweller channel between the device and the CIE (or the range extender): |

| | |
|---|---|
| | • **Online** — the device is connected to the CIE (or the range extender). Normal state.<br>• **Offline** — the device is not connected to the CIE (or the range extender). Check the device connection. |
| `<Range extender name>` | The connection state between the device and the **radio signal range extender**.<br>• **Online** — the device is connected to the range extender.<br>• **Offline** — the device is not connected to the range extender.<br>The field is displayed if the device operates via the radio signal range extender. |
| Battery charge | The device's battery charge level. Three states are available:<br>• **OK**.<br>• **Battery low**.<br>• **Error**.<br>When the batteries need to be replaced, users and the monitoring company will receive appropriate notifications.<br>Learn more |
| Lid | The state of the device's tamper button that responds to the detachment or opening of the device enclosure:<br>• **Open** — the device is removed from the SmartBracket mounting panel, or its integrity is compromised. Check the device mounting.<br>• **Closed** — the device is installed on the SmartBracket mounting panel. The |

| | |
|---|---|
| | integrity of the device enclosure and the mounting panel is not compromised. Normal state.<br><br>Learn more |
| Alarm volume | Volume level in case of alarm:<br><br>• **Quiet**<br>• **Loud**<br>• **Very loud** |
| Sound alarm signal | The state of the device's audible alert:<br><br>• **Not alerting** — the system is not in an alarm mode. The device is not emitting a sound.<br>• **Alerting** — the system is in an alarm mode. The device is emitting a sound.<br>• **Silenced** — the system is in an alarm mode. The device is silenced. |
| Visual alarm signal | The state of the device's visual alert:<br><br>• **Not alerting** — the system is not in an alarm mode. The device is not flashing.<br>• **Alerting** — the system is in an alarm mode. The device is flashing.<br>• **Silenced** — the system is in an alarm mode. The device is silenced. |
| Fire zone | Number and name of the fire zone to which the device is assigned. |
| Room | Name of the room to which the device is assigned. |
| Location | Detailed description of the device location. |

| | |
|---|---|
| Firmware | Device firmware version. |
| Device ID | The EN54 FireProtect (Sounder/VAD) Jeweller ID. It is also available on the device behind SmartBracket and on its packaging. |
| Device No. | Number of the device loop (zone). |

## Settings

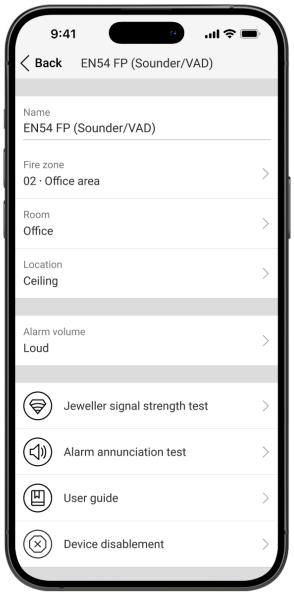


To change EN54 FireProtect (Sounder/VAD) Jeweller settings, in an Ajax app:

1. Go to the **Devices** tab.
2. Select **EN54 FireProtect (Sounder/VAD) Jeweller** from the list.
3. Go to **Settings**.
4. Configure the required settings.
5. Select **Back** to save the new settings.

| Settings | Meaning |
|---|---|

| | |
|---|---|
| Name | Name of the device. It is displayed in the list of CIE devices, SMS text, and notifications in the event feed.<br><br>To change the device name, tap on the text field.<br><br>The name can contain up to 24 Latin characters or up to 12 Cyrillic characters. |
| Fire zone | Selecting the fire zone to which EN54 FireProtect (Sounder/VAD) Jeweller is assigned.<br><br>The fire zone is displayed in the text of SMS and notifications in the event feed. |
| Room | Selecting the virtual room to which EN54 FireProtect (Sounder/VAD) Jeweller is assigned.<br><br>The room name is displayed in the text of SMS and notifications in the event feed. |
| Location | Detailed description of the device location. It is displayed next to the room name in the event feed notifications.<br><br>The location field can contain up to 24 Latin or Cyrillic characters. |
| Alarm volume | The device responds to system alarms with the selected volume:<br><br>• **Quiet**<br>• **Loud**<br>• **Very loud** |
| Jeweller signal strength test | Switching the device to the Jeweller signal strength test mode.<br><br>The test allows you to check the signal strength between the CIE (or the radio |

| | |
|---|---|
| | signal range extender) and the device via the wireless Jeweller data transfer protocol to select the optimal installation site.<br><br>Learn more |
| Alarm annunciation test | Switching the device to the **Alarm annunciation test** mode.<br><br>The test allows you to check the audible and visual alerts to ensure fire alarm signals are clearly audible and visible within the premises.<br><br>The test lasts for up to 10 minutes and can be stopped manually at any time. |
| User guide | Opening the EN54 FireProtect (Sounder/VAD) Jeweller user manual in an Ajax app. |
| Device disablement | The option allows for deactivating the device or its specific functions.<br><br>The device remains in the system but no longer detects signs of fire or raises an alarm. |
| Delete device | Unpairing the device, disconnecting it from the CIE, and deleting its settings. |

## Indication

The EN54 FireProtect (Sounder/VAD) Jeweller LED indicator can light up depending on the device state.

| Event | Sound indication | LED frame (VAD) indication | System LED indication | Note |
|---|---|---|---|---|

| | | | | |
|---|---|---|---|---|
| Alarm. | The sounder beeps according to the selected tone type. | The LED flashes in a defined temporal pattern (0.5 Hz). | No. | The device stops alerting once the alarm source is no longer detected.<br><br>Also, you can mute the alarm by tapping the **Silence alarm** button on the CIE touch screen or in an Ajax app. |
| Turning on the device. | No. | No. | The green, yellow, and red LEDs light up in turn and then go off. | Press the power button until the green LED lights up. |
| Turning off the device. | No. | No. | The green, yellow, and red LEDs light up simultaneously and then go off in reverse order. | Press the power button until the red LED goes off. |
| The battery is completely discharged. | No. | No. | The yellow LED constantly flashes. | The battery needs to be replaced. |
| Turning off the device when the battery is completely discharged. | No. | No. | The green, yellow, and red LEDs light up simultaneously and then go off in reverse order. | The battery needs to be replaced. |
| Tamper alarm.<br><br>The device has been removed from the SmartBracket mounting panel. | No. | No. | The yellow LED lights up for 1 second. | |

| | | | | |
|---|---|---|---|---|
| The device is installed on the SmartBracket mounting panel. | No. | No. | The green LED lights up for 1 second. | |
| Performing the Jeweller signal strength test. | No. | No. | The indication depends on the signal strength:<br><br>• **3 bars** — the green LED lights up continuously;<br><br>• **2 bars** — the yellow LED lights up continuously;<br><br>• **1 bar** — the red LED lights up continuously;<br><br>• **0 bar** — the red LED flashes rapidly. | |

## Sound patterns

| Tone | Tone type | Tone description |
|---|---|---|
| 1 | ——— | 970 Hz |

| | | |
|---|---|---|
| 2 | | 800 Hz / 970 Hz @ 2 Hz |
| 3 | | 800–970 Hz @ 1 Hz |
| 4 |  | 970 Hz, 1 s OFF / 1 s ON |
| 5 | | 970 Hz, 0.5 s / 630 Hz, 0.5 s |
| 6 | | 554 Hz, 0.1 s / 440 Hz, 0.4 s (AFNOR NF S 32 001) |
| 7 | | 500–1200 Hz, 3.5 s / 0.5 s OFF (NEN 2575:2000 Dutch Slow Whoop) |
| 8 |  | 420 Hz, 0.6 s ON / 0.6 s OFF (Australia AS1670 Alert tone) |
| 9 | | 1000–2500 Hz, 0.5 s / 0.5 s OFF × 3 / 1.5 s OFF (AS1670 Evacuation) |

| | | |
|---|---|---|
| 10 | | 550 Hz / 440 Hz @ 0.5 Hz |
| 11 |  | 970 Hz, 0.5 s ON / 0.5 s OFF × 3 / 1.5 s OFF (ISO 8201) |
| 12 |  | 2850 Hz, 0.5 s ON / 0.5 s OFF × 3 / 1.5 s OFF (ISO 8201) |
| 13 | | 1200–500 Hz @ 1 Hz (DIN 33 404) |
| 14 |  | 400 Hz |
| 15 | | 550 Hz, 0.7 s / 1000 Hz, 0.33 s |
| 16 | | 1500–2700 Hz @ 3 Hz |
| 17 |  | 750 Hz |

| | | |
|---|---|---|
| 18 | | 2400 Hz |
| 19 | | 660 Hz |
| 20 | | 660 Hz, 1.8 s ON / 1.8 s OFF |
| 21 | | 660 Hz, 0.15 s ON / 0.15 s OFF |
| 22 | | 510 Hz, 0.25 s / 610 Hz, 0.25 s |
| 23 | | 800 Hz / 1000 Hz, 0.5 s each (1 Hz) |
| 24 | | 250–1200 Hz @ 12 Hz |
| 25 | | 500–1200 Hz @ 0.33 Hz |

| | | |
|---|---|---|
| 26 | | 2400–2900 Hz @ 9 Hz |
| 27 | | 2400–2900 Hz @ 3 Hz |
| 28 | | 500–1200 Hz, 0.5 s / 0.5 s OFF × 3 / 1.5 s OFF (AS1670 Evacuation) |
| 29 | | 800–970 Hz @ 9 Hz |
| 30 | | 800–970 Hz @ 3 Hz |
| 31 |  | 800 Hz, 0.25 s ON / 1 s OFF |
| 32 | | 500–1200 Hz, 3.75 s / 0.25 s OFF (AS2220) |

The sound patterns 1, 2, 3, 6, 7, and 13 meet the requirements of EN 54-3.

## Faults

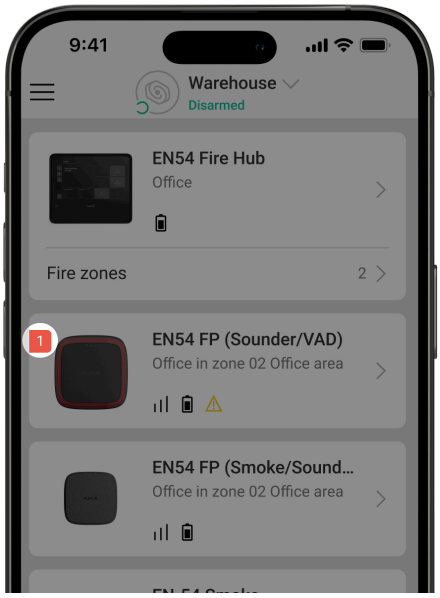


When an EN54 FireProtect (Sounder/VAD) Jeweller fault is detected, an Ajax app displays a fault counter on the device icon. All faults are indicated in the device states. Fields with faults are highlighted in yellow. Also, faults are displayed in the **Control** tab of the CIE display. More details about the fault can be found in the **Event center** or **Fire zones** tabs of the CIE.

**The EN54 FireProtect (Sounder/VAD) Jeweller fault is displayed if:**

- The device is removed from the SmartBracket mounting panel, or its integrity is compromised (a tamper button has been triggered).
- There is no connection with the CIE or radio signal range extender via Jeweller.
- The device battery is low.
- The device is faulty.

An admin or a user with **access level 2** can disable the notifications of Jeweller connection loss. The **Deactivate notifications** feature allows disabling fault indication and notifications of Jeweller connection loss for EN54 devices used in mobile environments, such as fire engines.

How to disable Jeweller connection loss notifications for EN54 devices

## Maintenance

Regularly check the device operation. Clean the device enclosure from dust, cobwebs, and other contaminants as they emerge. Use soft, dry wipes suitable for equipment maintenance. Do not use substances that contain alcohol, acetone, gasoline, and other active solvents to clean the device.

The pre-installed batteries provide up to 5 years of autonomous operation with the standard Jeweller settings (the polling interval is 36 seconds). If the batteries are low, the system will send an appropriate notification.

We recommend replacing the batteries immediately upon receiving the notification. It is advisable to use **Huiderui CR123A LiMn$0_2$ (3 V; 1,600 mAh)** batteries.

> Ensure the batteries are installed with the correct polarity. The polarity is marked inside the enclosure. After replacing the batteries, run the functionality test to ensure the device operates properly.

How long Ajax devices operate on batteries, and what affects this

## Technical specifications

All technical specifications

Compliance with standards

## Warranty

Warranty for the Limited Liability Company “Ajax Systems Manufacturing” products is valid for 2 years after the purchase.

If the device does not operate properly, we recommend contacting Ajax Technical Support first. In most cases, technical issues can be resolved remotely.

Warranty obligations

User agreement

**Contact Technical Support:**

- e-mail
- Telegram

Manufactured by “AS Manufacturing” LLC